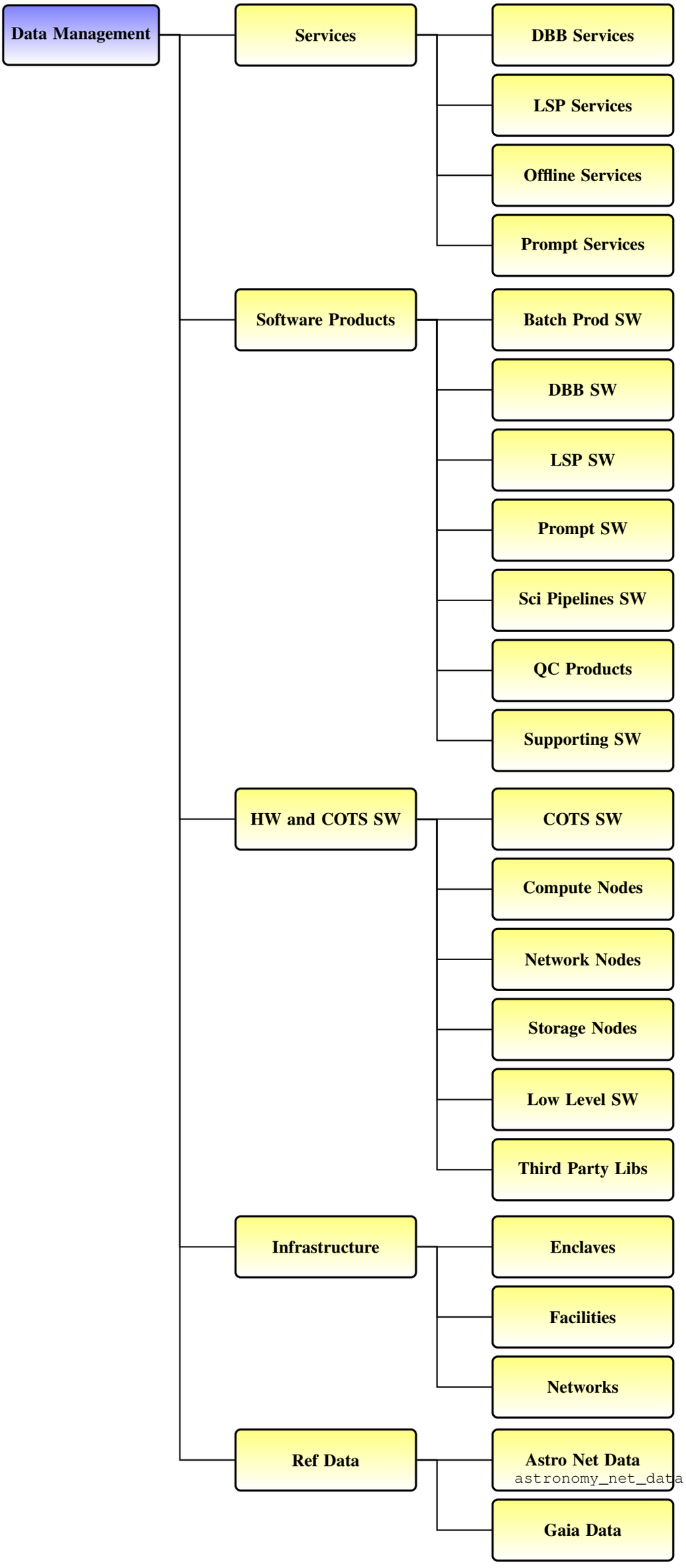
Data Management
Services
DBB Services
LSP Services
Offline Services
Prompt Services
Software Products
Batch Prod SW
DBB SW
LSP SW
Prompt SW
Sci Pipelines SW
QC Products
Supporting SW
HW and COTS SW
COTS SW
Compute Nodes
Network Nodes
Storage Nodes
Low Level SW
Third Party Libs
Infrastructure
Enclaves
Facilities
Networks
Ref Data
Astro Net Data
astronomy_net_data
Gaia Data